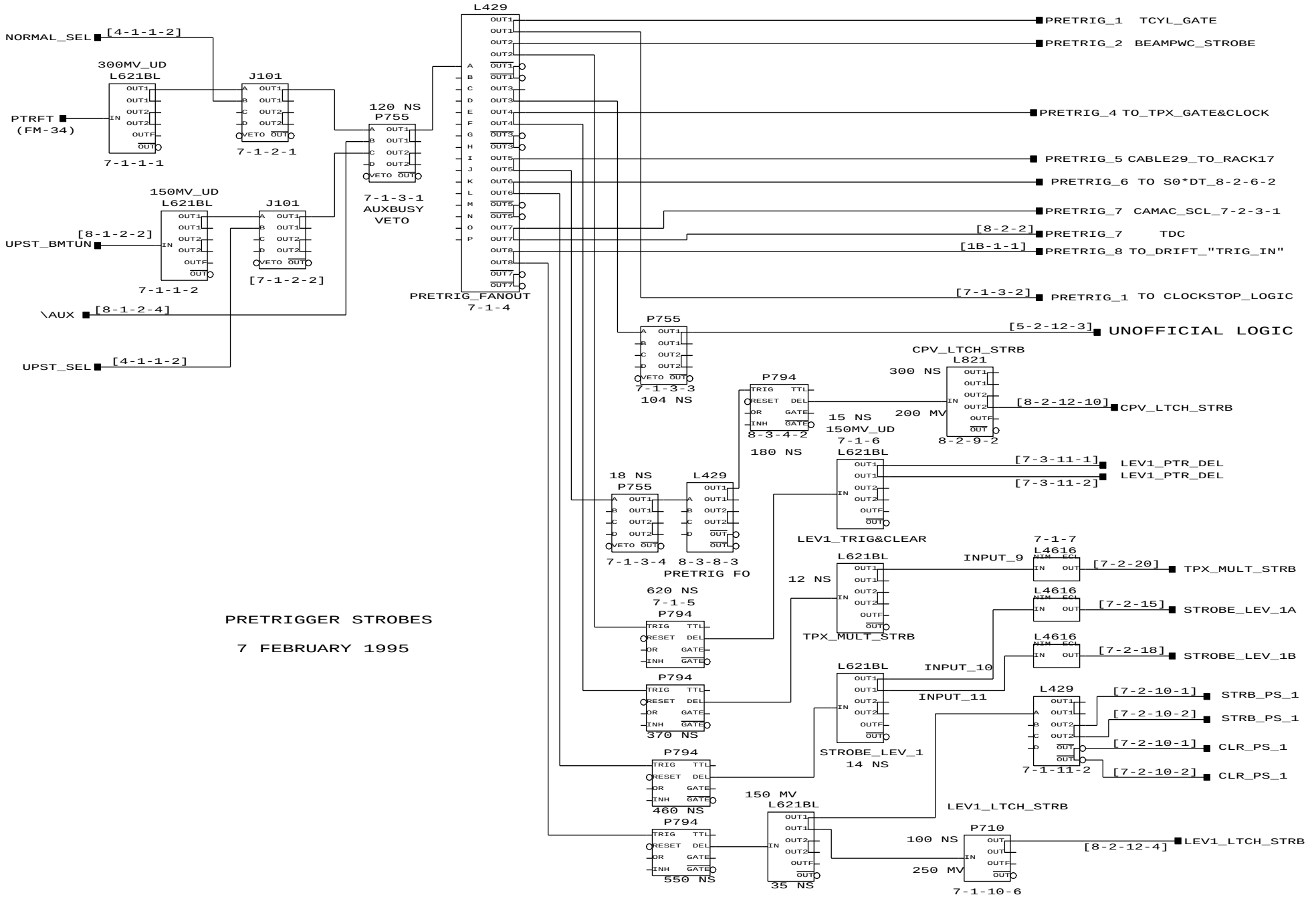


PRETRIGGER STROBES

7 FEBRUARY 1995